FIRST ANGLE PRJECTION | ALL DIMENSIONS ARE IN MM

Soft copy rec. on 11/6/19

DRAWING NO. 3-16053-40889

COPY RIGHT AND CONFIDENTIAL
The information on this document is the property of BHARAT HEAVY ELECTRICALS LIMITED
it must not be used directly or indirectly in any way detrimental to the interest of the company.

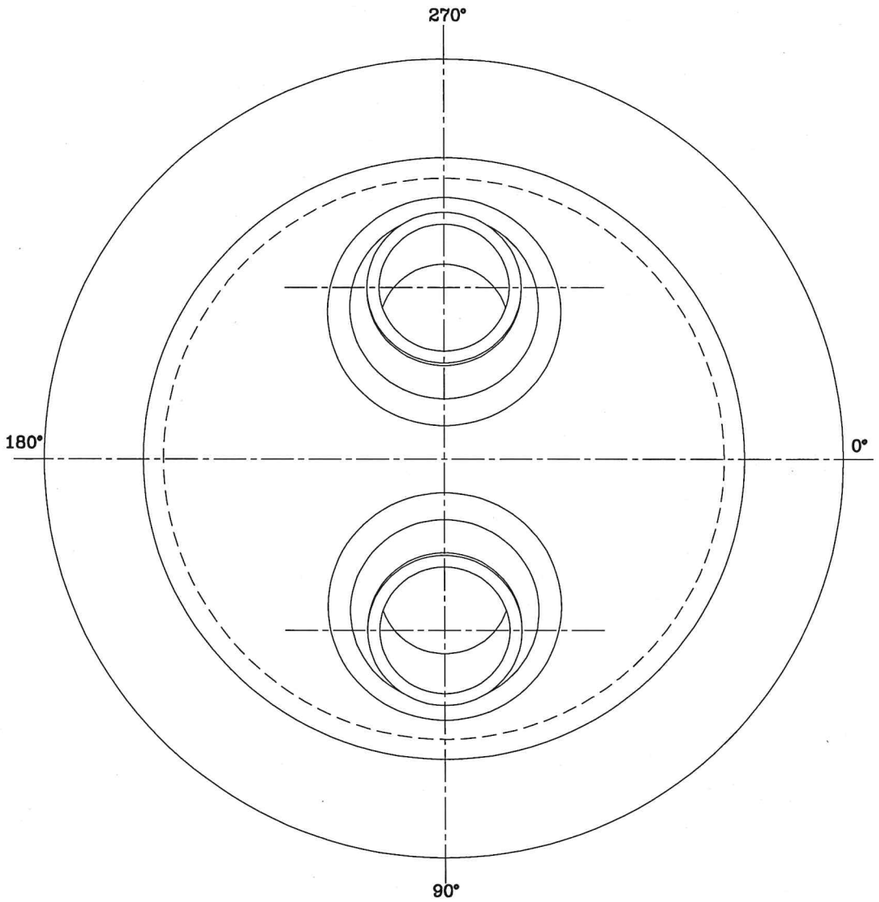

VIEW–A

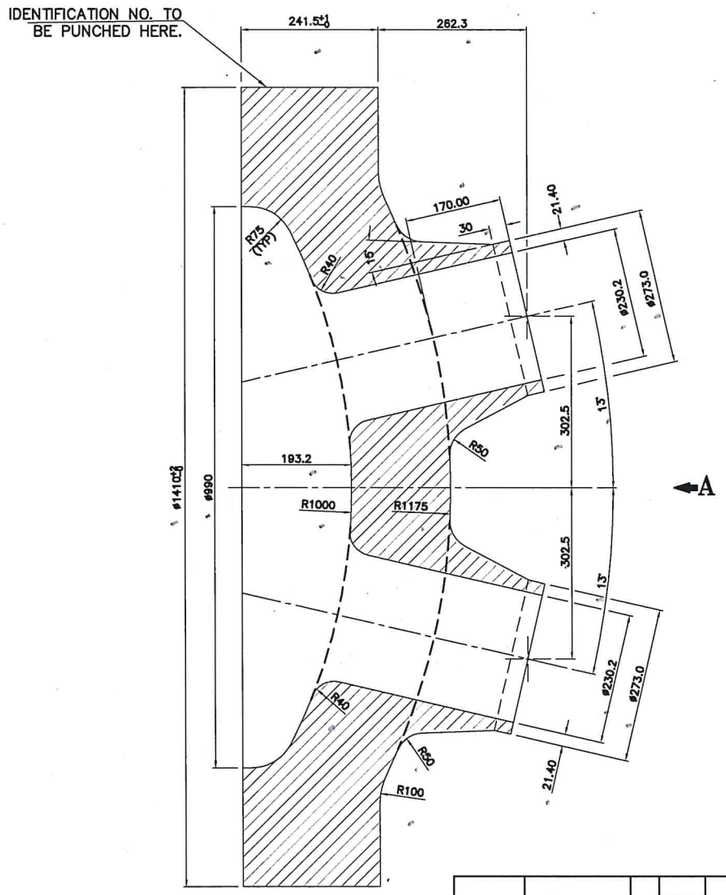

न्यूक्लियर पावर कॉर्पोरेशन ऑफ इंडिया लिमिटेड
Nuclear Power Corporation of India Limited

- [x] अनुमोदित / APPROVED
- [ ] टिप्पणी के अनुसार अनुमोदित / APPROVED AS NOTED
- [ ] संविरचन को आगे बढाएं / रोकें / PROCEED WITH / HOLD FABRICATION
- [ ] अंतिम ट्रांसपेरेन्सी एवं प्रतियाँ भेजें / SEND FINAL TRANSPARENCIES & PRINTS
- [ ] संशोधन करें एवं अनुमोदन के लिए पुन: प्रस्तुत करें REVISE & RESUBMIT FOR APPROVAL

जाँचकर्ता / CHECKED BY	समीक्षाकर्ता / REVIEWED BY	अनुमोदन कर्ता / APPROVED BY
11/6/19	शिवधारी 11/6/19.	11/6/19

किए जानेवाले कार्य का अनुमोदन आपूर्तिकर्ता संविदाकार को विनिर्देशनों के अनुसार आपूर्ति करने के उत्तरदायित्व से मुक्त नहीं करता है।
This approval of the work to be done does not relieve the supplier of the responsibility of supply according to specifications.

01	ø1410		001	PRIMARY HEAD					B.O. SA350 LF2Cl.1	A	KG	2605.0					
VAR00 QTY.–Nos	REMARKS	VAR. NO.	ITEM NO.	DESCRIPTION	STD	DRAWING NO.	IT.NO. / VAR.	MATL. CODE / MATL. SPCN.	A C	UNIT	UNIT WT. / QTY.	GS	ZONE				
28 — CARD TYPE–3				28 — CARD TYPE–1							28 — CARD TYPE–2						

TECHNICAL REQUIREMENTS (TR):–

1. SUPPLY CONDITION : HEAT TREATED AND FINISH MACHINED ALL OVER.
2. ALL TECHNICAL AND TESTING REQUIREMENTS SHALL BE AS PER NPCIL APPROVED SPECIFICATION No.– BHEL/NPCIL/30599/CS–FORGINGS/CDE–19–3411.
3. NO REPAIRS/WELDING SHALL BE PERMITTED WITHOUT PRIOR APPROVAL OF NPCIL.
4. TEST COUPON FOR TESTING SHALL BE FORMED AS PER SPECIFICATION NO.– BHEL/NPCIL/30599/CS–FORGINGS/CDE–19–3411.
5. IDENTIFICATION TO BE STAMPED AT LOCATION SHOWN WITH FOLLOWING INFORMATION:
   a). PURCHASE FORGING NUMBER.
   b). HEAT NUMBER
   c). BHEL PO NUMBER
   d). MATERIAL DESIGNATION.
6. MATERIAL OF CONSTRUCTION : SA 350 LF2 CLASS–1.
7. TEMPORARY OIL BASED RUST PREVENTIVE TO BE APPLIED AFTER MACHINING ON ALL SURFACES.
8. ALL DIMENSIONS INDICATED ARE IN mm.
9. UNLESS OTHERWISE MENTIONED THE TOLERANCE ON LINEAR AND ANGULAR DIMENSIONS SHALL BE AS PER IS:2102.
10. THE SURFACE FINISH OF FORGINGS SHALL BE 3.2 OR BETTER.
11. ALL MACHINED SURFACES SHALL BE SUBJECTED TO MT/PT.

DO NOT SCALE THE DRAWING. UNLESS OTHERWISE STATED:–
ALL DIMENSIONS ARE IN mm.
MACHINE ALL OVER.
SURFACE FINISH TO BE 3.2/ OR BETTER.
REMOVE ALL BURRS.
REMOVE ALL EXTERNAL SHARP CORNERS AND EDGES BY CHAMFERING TO 0.10 x 45°.
ROUND ALL INTERNAL CORNERS AND EDGES TO R 0.10.
TOLERANCES ON RADII AND CHAMFERS (IS : 2102)

RADII AND CHAMFERS	0.5–3	3–6	6–30
TOLERANCES	±0.2	±0.5	±1.0

TOLERANCE ON LINEAR DIMENSIONS (IS:2102)

DIMENSIONS	TOL.	DIMENSIONS	TOL.
UP TO 6	±0.1	315 –1000	±0.8
6 – 30	±0.2	1000–2000	±1.2
30 – 120	±0.3	2000–4000	±2.0
120 – 315	±0.5	4000–8000	±3.0

TOLERANCE ON LINEAR DIMENSIONS

SPECIFIED DIMENSIONS	TOLERANCE
XX	± 0 . 40
XX.X	± 0 . 40
XX.XX	± 0 . 25

TOLERANCE ON ANGULAR DIMENSIONS : 0°–0.5°

ADDITIONAL INFORMATION
DRG. LIST : 4–16503–40359

STATUS OF DRAWING
W/O. NO. : 18085/86–W–04801

DISTRIBUTION OF PRINTS
CDE – 1 HCM – 4 FWM – 4

एनपीसीआईएल NPCIL

NUCLEAR POWER CORPORATION OF INDIA LIMITED
(A GOVERNMENT OF INDIA ENTERPRISE)
PROJECT : GORAKHPUR HARIYANA ANU VIDHYUT PARIYOJANA 1&2 (700 MWe)
NPCIL PURCHASE ORDER NO. : CMM/FTP/10–33–1–1149/e–PO/30599, DATED 25.01.2019
NPCIL DRAWING NO : GHAVP–1&2/33311/2010/11/DD REV.00

EQUIPMENT NAME : SHUTDOWN HEAT EXCHANGER
TAG NO : (3341–HX1,2,3,4)

बीएचईएल BHEL
भारत हेवी इलेक्ट्रिकल्स लिमिटेड
भोपाल
BHARAT HEAVY ELECTRICALS LTD
BHOPAL

	नाम/ NAME	हस्ता./SIGN	दिनांक/DATE	वे.रि. की संख्या NO. OF VAR.
बनाया DRN.	महेन्द्र कुमार जायसवाल		02/03/2019	
जाँचा CKD.	नागेन्द्र सिंह		05/03/2019	
अनुमोदित APPD.	ए.के.माहौर		08/03/2019	

विभाग DEPT. CDE	उन.टाल. नाप की श्रेणी UNTOL. DIMS. GR.		अनुपात SCALE	भार (कि.ग्रा.) WEIGHT (K.G.)	उसे. ड्रॉइंग का संदर्भ REF. TO ASSY. DRG.	मद क्र. ITEM NO.	मद संख्या NO. OF ITEM
कोड CODE 411	M AA0203208		–	2605.0	3–16503–40873	001	–

शीर्षक/ TITLE
PRIMARY HEAD FORGING (SEMI–FINISHED)

ड्रॉइंग क्र./DRAWING NO. 3–16503–40889 | पुन./ REV. 05
पृष्ठ क्र./SHT. NO. 01 | पृष्ठों की संख्या/NO. OF SHT. 01

REV.	DATE			REV.	DATE			REV.	DATE		
05	11/06/19	ALTERED	कमलेश गामीत	04	07/06/19	ALTERED	कमलेश गामीत	03	22/05/19	ALTERED	कमलेश गामीत
		CHECKED	नागेन्द्र सिंह			CHECKED	नागेन्द्र सिंह			CHECKED	नागेन्द्र सिंह
		APPROVED	ए.के.माहौर			APPROVED	ए.के.माहौर			APPROVED	ए.के.माहौर
ZONE	DRAWING REVISED BASED ON NPCIL COMMENTS DTD. 11/06/2019.			ZONE	DRAWING REVISED BASED ON NPCIL COMMENTS DTD. 03/06/2019.			ZONE	DRAWING REVISED BASED ON NPCIL COMMENTS DTD. 20/05/2019. PROFILE DIMENSIONS INCORPORATED TO PROCURE FORGING IN FINISH CONDITION.		

REF. DRG. NO. | SIGN. & DATE | INVENTORY NO.

FORMAT SIZE A3